HITACHI
FLORA

(Microsoft® Windows® XP Professional Operating System)
(Microsoft® Windows® 2000 Professional Operating System)
(Microsoft® Windows NT® Workstation Operating System Version 4.0)

トラブル対応集

[illegible]

[illegible] 1
1. [illegible] 2
1.1 [illegible] (STOP [illegible])
[illegible] 3
1.2 [illegible] ([illegible]) [illegible] 5
1.3 [illegible] 7
1.4 [illegible] 9
2.1 "Windows [illegible] " [illegible] 11
2.2 [illegible] 12
2.3 [illegible] 16
2.4 Web [illegible] 17
2.5 [illegible] BIOS [illegible] 18
2.6 [illegible] 19
[illegible] 21

1. [illegible]

[illegible]

[illegible] ([illegible]) [illegible]
[illegible], [illegible] / [illegible]
[illegible]
[illegible]
[illegible] / [illegible]
[illegible]
[illegible]
[illegible]
[illegible]
[illegible]
[illegible]
[illegible]
[illegible]
[illegible]
[illegible]
[illegible]
[illegible]
[illegible]
[illegible]
[illegible] (STOP [illegible])
[illegible] ([illegible])
[illegible]
[illegible]
[illegible]
[illegible]

1.1[illegible](STOP[illegible])
[illegible]

[illegible](STOP[illegible])[illegible]OS[illegible]
[illegible]
[illegible]

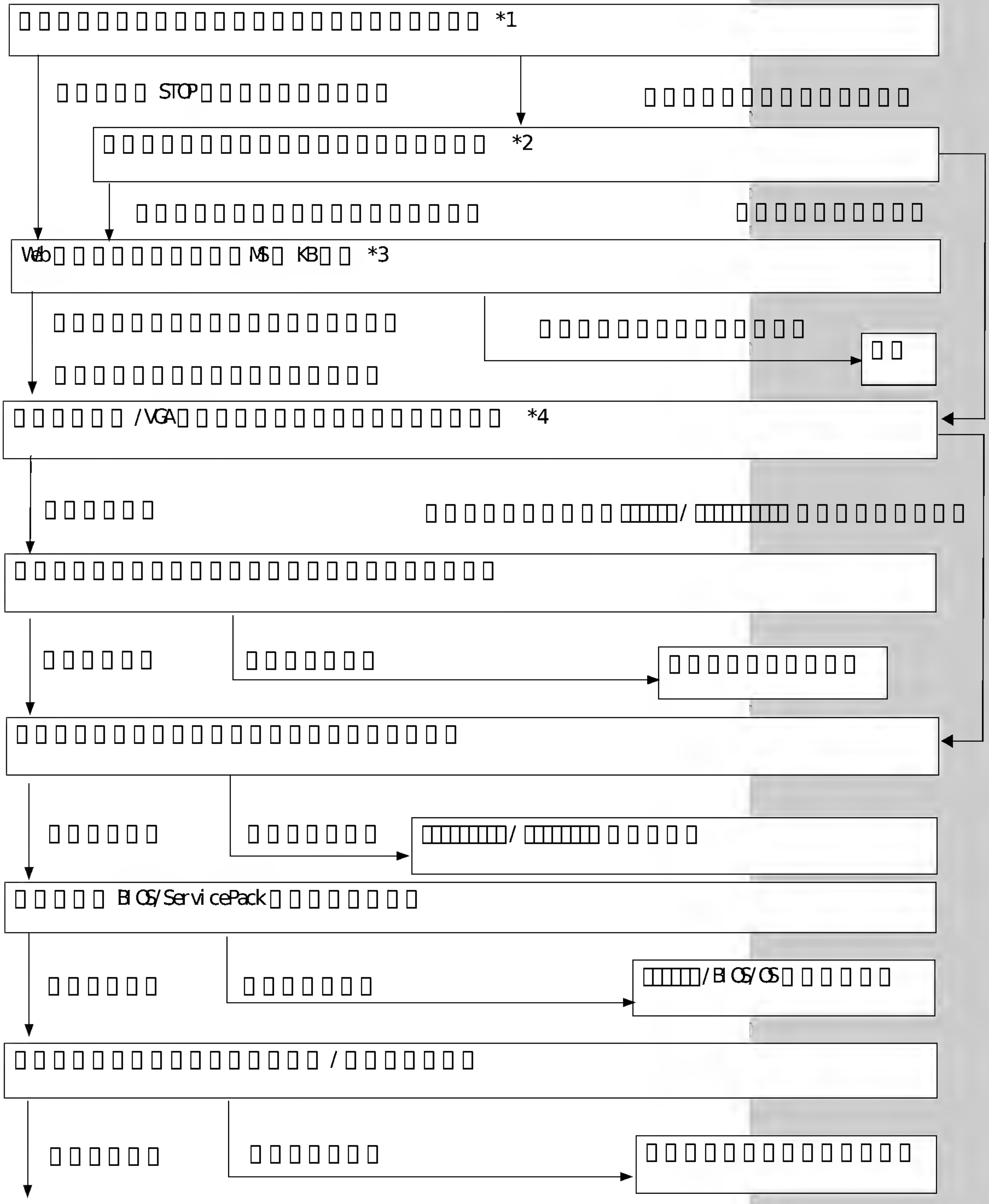
*1
STOP
*2
Web
MS
KB
*3
/VGA
*4
/
/
BIOS/ServicePack
/BIOS/OS
/

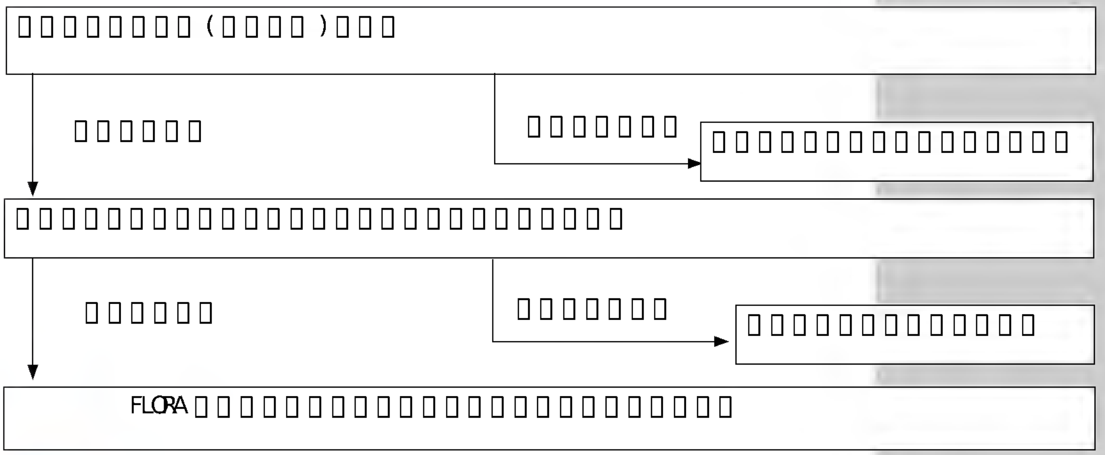

参照

*1 □□□□□□□□□STOP□□□□□□□→ P. 16
*2 □□□□□□□□□→ P. 12
*3 WEB□□□□□→ P. 17
*4 "Windows□□□□□□□□□□□"□□□□□□□→ P. 11

重要

◎ □□□□□□□□□□□□□□□□□□□□□□□□□□□□□□□

1. 2 [illegible] ([illegible]) [illegible]

Windows NT/Windows 2000/Windows XP [illegible]

[illegible] [illegible] ([illegible])
[illegible] [illegible] ([illegible])
[illegible] OS [illegible]

[illegible] OS [illegible] / [illegible]

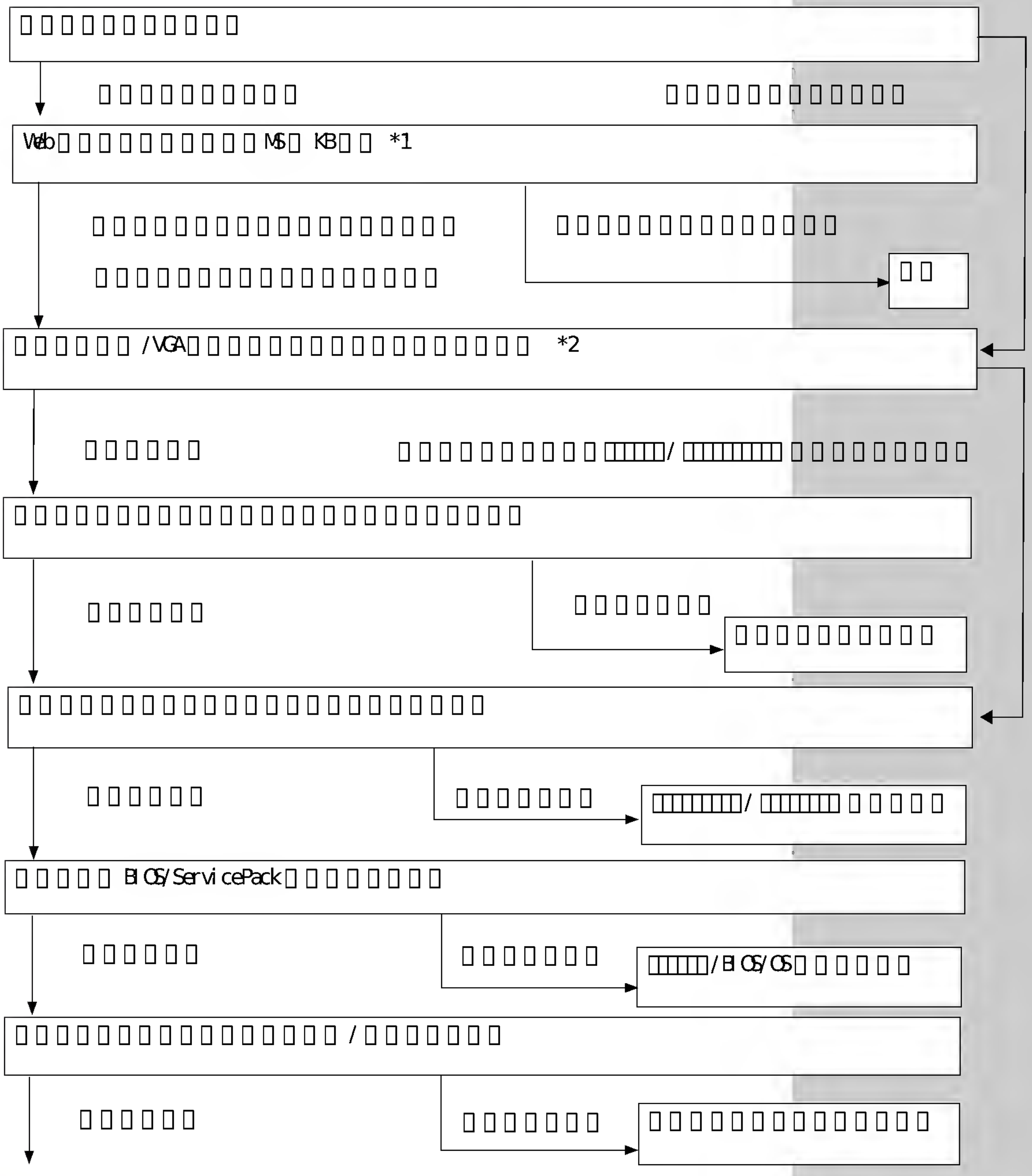
Web [illegible] MS [illegible] KB [illegible] *1
[illegible] / VGA [illegible] *2
[illegible] / [illegible]
[illegible] / [illegible]
[illegible] BIOS/ServicePack [illegible]
[illegible] / BIOS/OS [illegible]
[illegible] / [illegible]

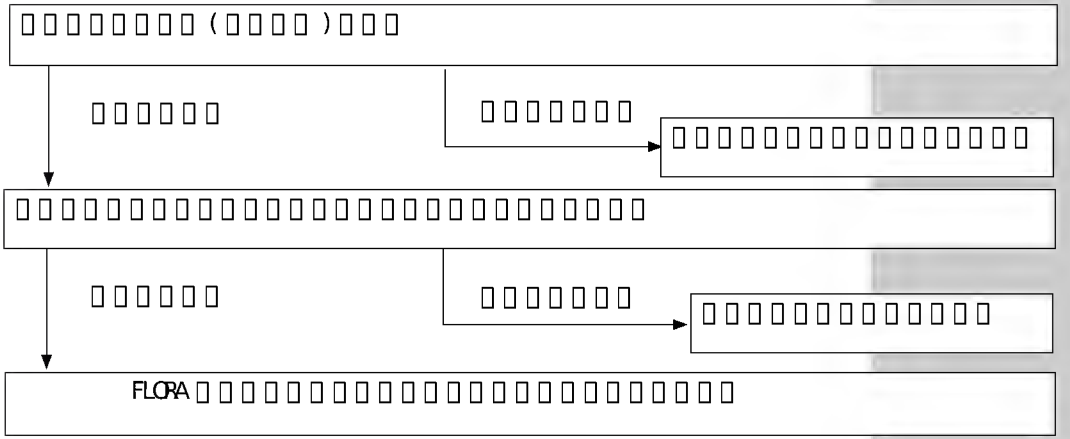

参照

*1　WEB□□□□□ → P.17

*2　"Windows □□□□□□□□□□□ "□□□□□□□ → P.11

ヒント

★ □□□□□□□□□□□□□□□□□□□□□□□□□□□□□ /□□□□□□□□□□□□

1.3 □□□□□□□□□□□□□□□ □□

□□□□□□□□□□□□□□□□□□□□□□□□□□(STOP□□□)□ □□□□□□□□□□□□□□□□□□□□□□□□□□□□□□□□□□ □□□□□□□□□□□□□□□□□□

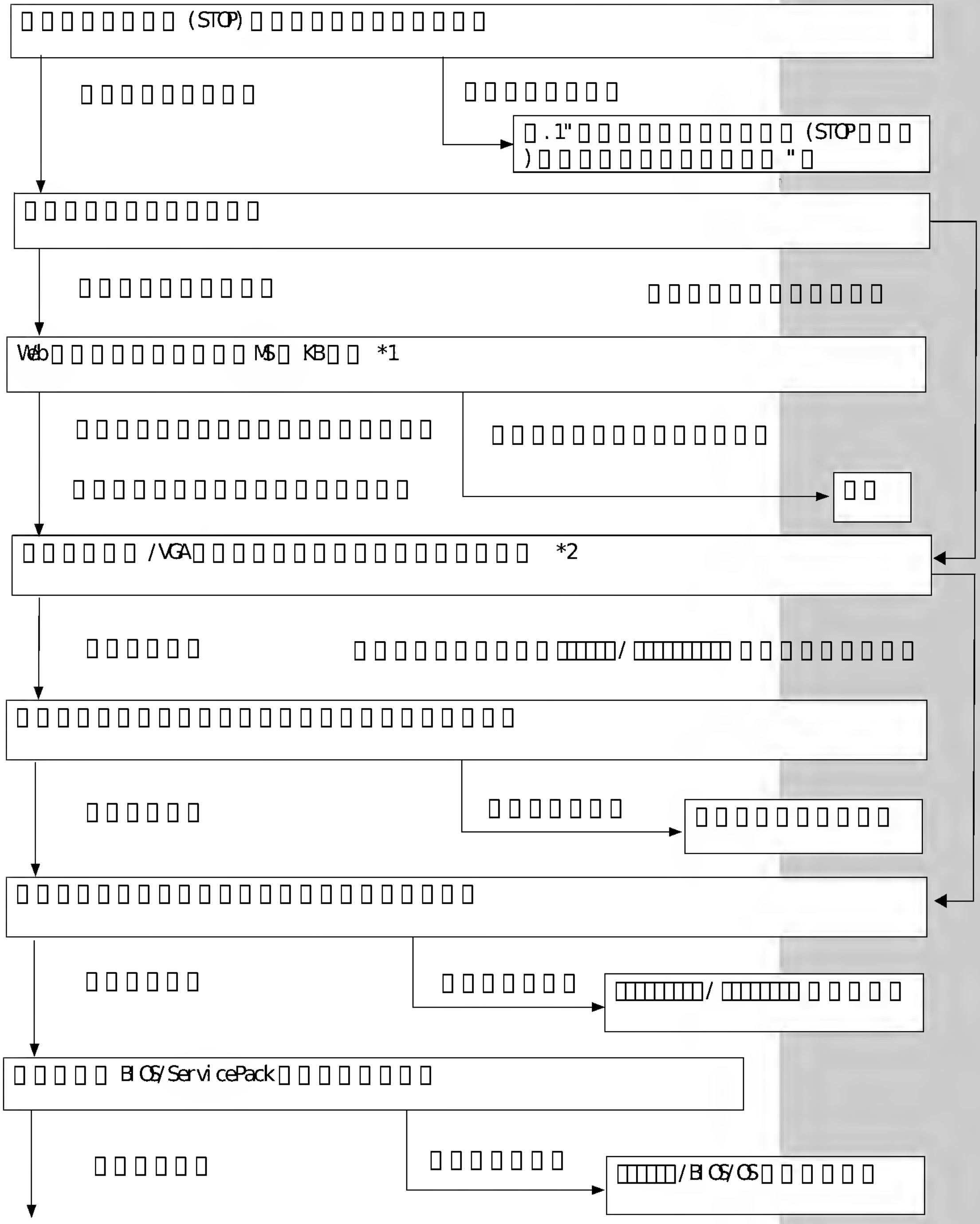
□□□□□□□□□(STOP)□□□□□□□□□□□□□□
□□□□□□□□□
□□□□□□□□
□.1"□□□□□□□□□□□□(STOP□□□)□□□□□□□□□□□□□□□"□
□□□□□□□□□□□□□□
□□□□□□□□□□
□□□□□□□□□□□□
Web□□□□□□□□□□□MS□ KB□□ *1
□□□□□□□□□□□□□□□□□□□□□□□□□□
□□□□□□□□□□□□□□
□□□□□□□□□□□□□□□□□□□□□□□□□
□□
□□□□□□/VGA□□□□□□□□□□□□□□□□□□□□□□□ *2
□□□□□□
□□□□□□□□□□□□□□□/□□□□□□□□□□□□□□□□□□□□
□□□□□□□□□□□□□□□□□□□□□□□□□
□□□□□□
□□□□□□□
□□□□□□□□□□
□□□□□□□□□□□□□□□□□□□□□□□
□□□□□□
□□□□□□□
□□□□□□/□□□□□□□□□□□□□□
□□□□□BIOS/ServicePack□□□□□□□□
□□□□□□
□□□□□□□
□□□□□/BIOS/OS□□□□□□□

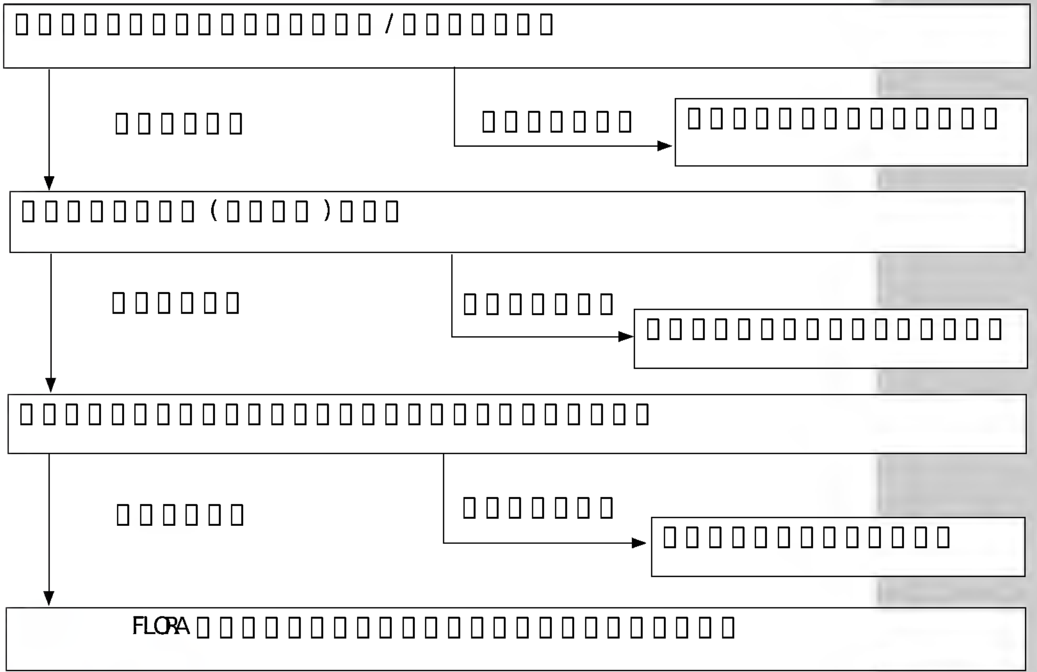

参照

*1 WEB□□□□□→ P. 17

*2 "Windows □□□□□□□□□□□"□□□□□□□→ P. 11

ヒント

★ □□□□□□□□□□□□□□□□□□□□□□□□□□□□□/□□□□□□□□□□□□

1.4 [illegible]

[illegible]

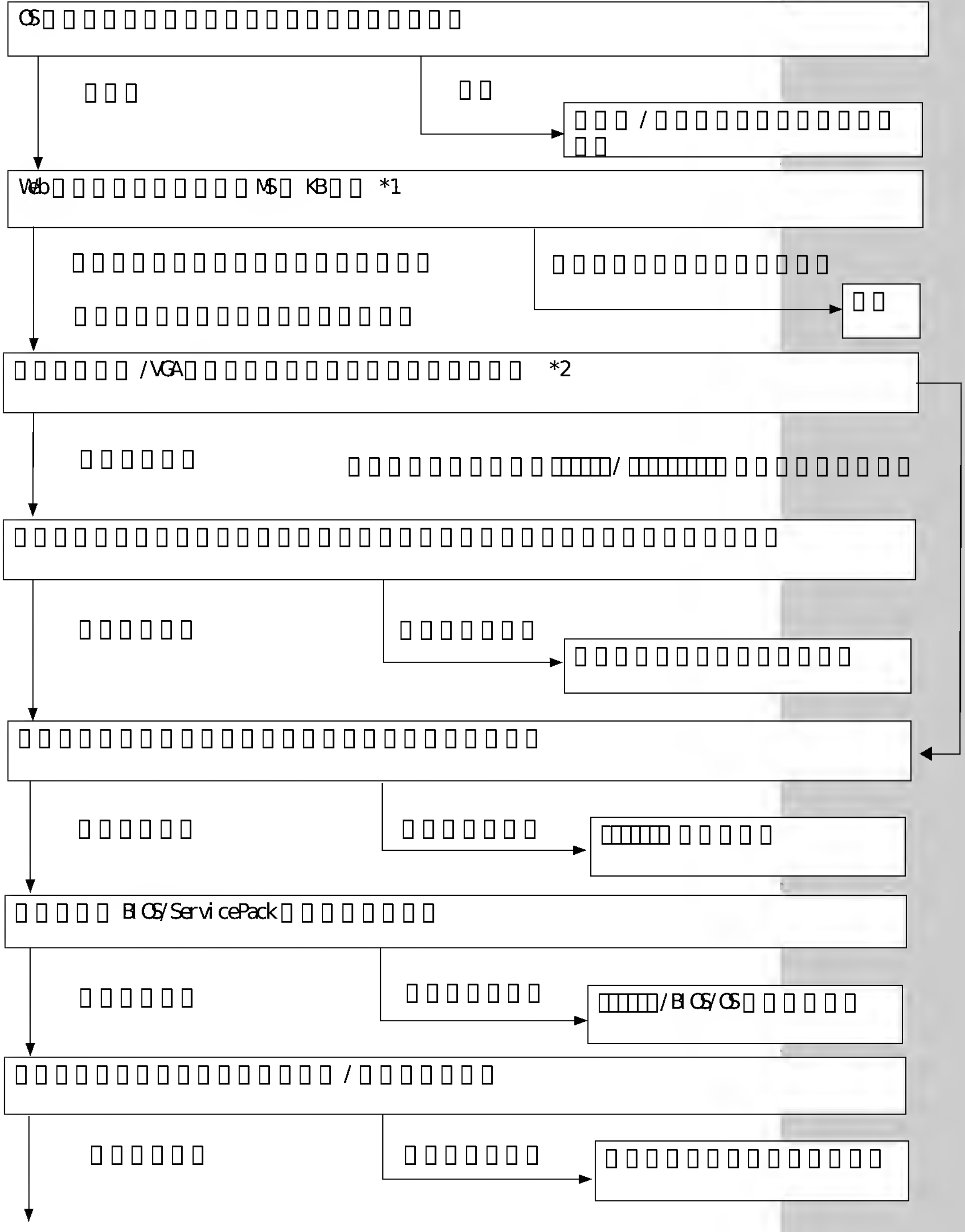
OS[illegible]
[illegible]
[illegible]
[illegible]/[illegible]
Web[illegible]MS[illegible]KB[illegible] *1
[illegible]
[illegible]
[illegible]
[illegible]
[illegible]/VGA[illegible] *2
[illegible]
[illegible]/[illegible]
[illegible]
[illegible]
[illegible]
[illegible]
[illegible]
[illegible]
[illegible]
[illegible]
[illegible]BIOS/ServicePack[illegible]
[illegible]
[illegible]
[illegible]/BIOS/OS[illegible]
[illegible]/[illegible]
[illegible]
[illegible]
[illegible]

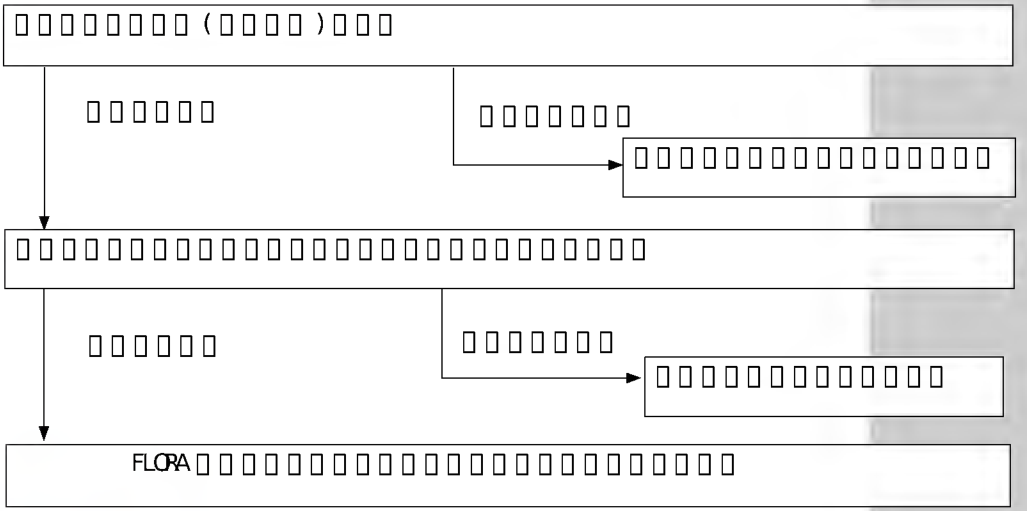

参照

*1 WEB□□□□□→ P.17

*2 "Windows □□□□□□□□□□□ "□□□□□□□→ P.11

ヒント

★ □□□□□□□□□□□□□□□□□□□□/□□□□□□□□□□□□

2.1"Windows [illegible]"[illegible]

Windows 2000/Windows XP [illegible] "Windows [illegible] " [illegible] Windows [illegible]

[illegible]

Windows 2000 [illegible] "Windows 2000 [illegible] F8 [illegible] " [illegible] F8 [illegible] Windows XP [illegible] F8 [illegible] "Windows 2000 [illegible] "/"Windows [illegible] " [illegible]

[illegible] Windows XP [illegible] "Windows [illegible] " [illegible] " [illegible] " [illegible] " [illegible] " [illegible]

[illegible] 1 [illegible]

[illegible]	[illegible]
[illegible]	[illegible]
[illegible]	[illegible]
[illegible]	[illegible] Explorer.exe [illegible]
[illegible]	[illegible] SystemRoot [illegible] "Ntbtlog.txt" [illegible] "[illegible] SystemRoot [illegible]" [illegible] Windows2000 [illegible] "C:¥WINNT" [illegible] Windows XP [illegible] :"C:¥Windows" [illegible]
VGA [illegible]	VGA [illegible]
[illegible]	[illegible]
[illegible]	[illegible] Windows 2000/Windows XP [illegible]
[illegible]	[illegible]

2.2 [illegible]

[illegible] Event Log [illegible]

[illegible]

[illegible] 1 [illegible] 1 [illegible] ID [illegible]

Windows XP [illegible]

[illegible] [[illegible]]—[[illegible]] [illegible]
[illegible] " [illegible] " [illegible]
[illegible] " [illegible] " [illegible]
[illegible]

Windows 2000 [illegible]

[illegible] [[illegible]] [illegible]
[illegible] " [illegible] " [illegible]
[illegible] " [illegible] " [illegible]
[illegible]

Windows NT [illegible]

[illegible] [[illegible]]—[[illegible]]-[[illegible]]-[[illegible]] [illegible]
[illegible]
[illegible] [[illegible] L [illegible]] [illegible]

[illegible]

[illegible]

[illegible]

[illegible] OS [illegible]

参照

[illegible] → P. 14

[illegible]

[illegible]

[illegible]

[illegible]

重要

- ◎ [illegible]
- ◎ [illegible]

[illegible]

[illegible] 5 [illegible] X [illegible]

[illegible] 2 [illegible]

[illegible]	[illegible]
[illegible]	[illegible]
[illegible]	[illegible]
[illegible]	[illegible]
[illegible]	[illegible]
[illegible]	[illegible]

[illegible]

[illegible]

[illegible]

[illegible] ([illegible]) [illegible] − [illegible] , [illegible] ([illegible] / [illegible] / [illegible] etc) [illegible]

[illegible]

[illegible]

[illegible] − [illegible] , [illegible] ([illegible] / [illegible] / [illegible] etc) [illegible]

重要

- ◎ [illegible]

■ □□□□□□□□□□

□□□□□□□□□□□□□□□□□□□，□□□□□□□□□□□□□□ □□□□□□□□□□□□□□□□□□□□□□□□□□□□□□□□□□□ □□□□□□□□□□□□□□□□□□□□

□□□□ □□□□□□□□□□□
□□□ □□□□□□□□□□□□□□□□□□□□□□□□□
□□□ □□□□□□□□□□□□□□□□□□□□□□□□□
□□□□ID□ □□□□□□□□□□
□□□-□ □□□□□□□□□□□□□□□□□□□□□□□□□□□□□□ □□□□
□□□□□□□□□ □□□□□□□□□□□□□□□□□□□□
□□□ □□□□□□□□□□□□□□□□□□□□□□□

■ □□□□□□□

□□□□□□□□□□□□□□□□□□□□□□□□□□□□□□□□□□ □□□□□□□□□□□□□□□□□□□□□□□□□□□□□□□□□□□ □□□□□□□□□□□□□□□□□□□□□□□□□□□□□□□□□□□ □□□□□□□□□□□□□□□□□□□□□□□□□□□□□□□□□□□ □□□□□□□□□□□□□□□□□□□□□□□□□□□□□□□

□□□□□□□□□□□□□□□□□□□□□□□□□□□□□□□□□□□ □□□□□□□□□□□□□□□□□□□□□□□□□□□□□□□□□□□ □□□□□□□□□□□□□□□□□□□□□□□□□□□□□□□□□□□ □□□□□□□□□□□

■□□□□□□□□ □□ □□

□□□□□□□□□□□□□□□□□□□□□□□□ID□□□□□□□□□□ □□□□□□□□□□□□□□□□□□□□□□□□□□□□□□□□□□□ □□□□□□□□□□□□□"Error and Event Messages Help"(□)□□ □ □ □□□ □ □□ □http://www.microsoft.com/japan/technet/win2000/ErrorandEventMessages/helpdl.asp(2001□ 9□□□)□□□□□□□□□□ □□□□□□□□□□□□□

□□□Windows XP□□□□□□□□□□□□□□□□□□□□□□□ "□ □□□□□□□□□ "□ "□□ "□□□□□□□□□□□□□□□□□□□□ □□□□□□□□□□□□□□□□□□□□

重要

◎ Windows NT/Windows 2000□□□□□□□□□□□ □ □□ □□□□CD□ 1□□□□□ □support□tools □setup.exe□□□□□□□□□□□□□□□□□□□□□□□□□□□□□□□□□□

■STOP□□□□□□□□□□□□□□□□□□□□□□□

□□□□ □□ □□□□□□□□□□□□□□□□□□□□□□□□□ WindowsNT□□□[□□□□□□□□□□□]□□□ [□□/□□□□□□□] □□□ [□□]□□□□□□□□ [□□□□ □□□□□□□□□□□□□]□ □□□□□□□□□□□□□□□□□□□Windows 20000/Windows XP□□□□ □□[□□□□□□□□□□□]□□□ [□□]□□□□[□□/□□]□□ □□□□□□□□□□□□□□□□□□□□□□□□□ [□□□□ □□□□ □□□□□□□□]□□□□ □□□□□□□□□□□□

□□□□□□□□□□ □□ □□□□□□□□□□ □□□□□□□□□□□ □□□□□

■□□□□□□□□□□□□□□□□ □□ □□□□□□□□□□□□□

□□□□ □□□□□□□□□□□□□□□□□ Memory.dmp □□□□□□□
□□□□□□□□□□□□□□□□□□□□□□□□□□□□□□□□□□□
□□□□□□□□□□□□□□□□□□□ □□□□ (Windows NT) □□□

□□□□□
□□□□ ID: 1001
□□□ : Save Dump
□□ : The computer has rebooted from a bugcheck. The bugcheck was :
0xc000021a (0xe1270188, 0x00000001, 0x00000000, 0x00000000).
Microsoft Windows NT (v15.1381). A dump was saved in:
C:¥WINNT¥MEMORY.DMP.

□□□□□□□STOP □□□ 0xc000021a □ 4 □□□□□□□□□□□□□□
□□□□□□□□□□□ STOP □□□□□□□□□□□□□□□□□□□□□
□□□□□□□□□□□□STOP □□□□□□□□□□□□□□□□□□□□
□□□□□□□□□□□□□Microsoft Knowledge Base □ STOP □□□□□
□□□□□□□□□□□Microsoft Knowledge Base □□□□□ STOP □□
□□□□□□□□□□□□□□□□□□□

重要

◎ □□□□ID□ 1000□□□□□□□□□□□□□□□□□□□□□□□□□□□□□□□□
□□□□□□□□□□□□□□□□□□□□□□□□□□

2.3 [illegible]

STOP [illegible] 1 [illegible] 16 [illegible]

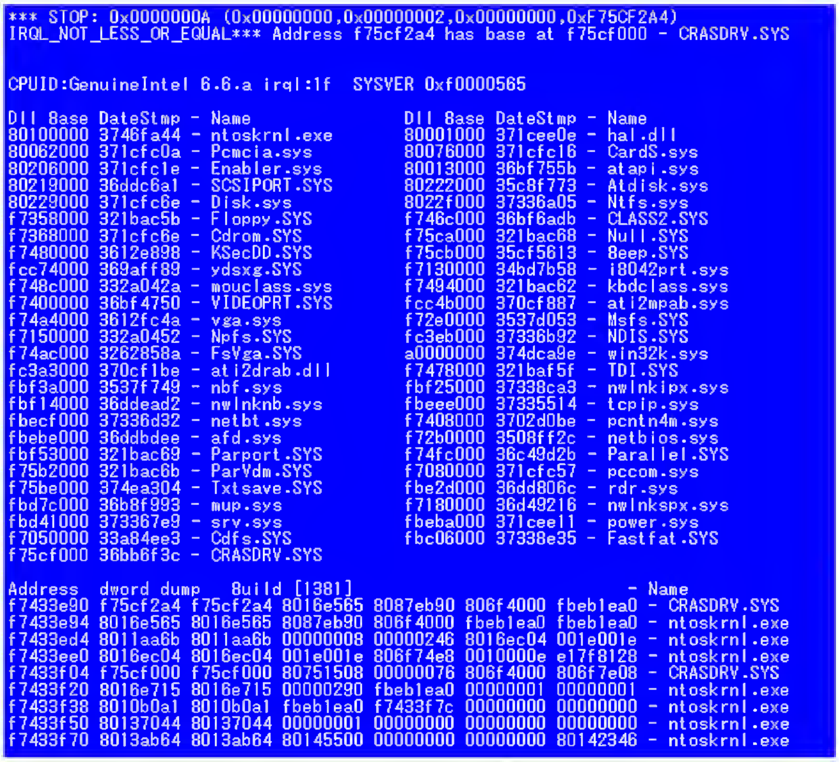

```
*** STOP: 0x0000000A (0x00000000,0x00000002,0x00000000,0xF75CF2A4)
IRQL_NOT_LESS_OR_EQUAL*** Address f75cf2a4 has base at f75cf000 - CRASDRV.SYS


CPUID:GenuineIntel 6.6.a irql:1f  SYSVER 0xf0000565

Dll Base DateStmp - Name                Dll Base DateStmp - Name
80100000 3746fa44 - ntoskrnl.exe        80001000 371cee0e - hal.dll
80062000 371cfc0a - Pcmcia.sys          80076000 371cfc16 - CardS.sys
80206000 371cfc1e - Enabler.sys         80013000 36bf755b - atapi.sys
80219000 36ddc6a1 - SCSIPORT.SYS        80222000 35c8f773 - Atdisk.sys
80229000 371cfc6e - Disk.sys            8022f000 37336a05 - Ntfs.sys
f7358000 321bac5b - Floppy.SYS          f746c000 36bf6adb - CLASS2.SYS
f7368000 371cfc6e - Cdrom.SYS           f75ca000 321bac68 - Null.SYS
f7480000 3612e898 - KSecDD.SYS          f75cb000 35cf5613 - Beep.SYS
fcc74000 369aff89 - ydsxg.SYS           f7130000 34bd7b58 - i8042prt.sys
f748c000 332a042a - mouclass.sys        f7494000 321bac62 - kbdclass.sys
f7400000 36bf4750 - VIDEOPRT.SYS        fcc4b000 370cf887 - ati2mpab.sys
f74a4000 3612fc4a - vga.sys             f72e0000 3537d053 - Msfs.SYS
f7150000 332a0452 - Npfs.SYS            fc3eb000 37336b92 - NDIS.SYS
f74ac000 3262858a - FsVga.SYS           a0000000 374dca9e - win32k.sys
fc3a3000 370cf1be - ati2drab.dll        f7478000 321baf5f - TDI.SYS
fbf3a000 3537f749 - nbf.sys             fbf25000 37338ca3 - nwlnkipx.sys
fbf14000 36ddead2 - nwlnknb.sys         fbeee000 37335514 - tcpip.sys
fbecf000 37336d32 - netbt.sys           f7408000 3702d0be - pcntn4m.sys
fbebe000 36ddbdee - afd.sys             f72b0000 3508ff2c - netbios.sys
fbf53000 321bac69 - Parport.SYS         f74fc000 36c49d2b - Parallel.SYS
f75b2000 321bac6b - ParVdm.SYS          f7080000 371cfc57 - pccom.sys
f75be000 374ea304 - Txtsave.SYS         fbe2d000 36dd806c - rdr.sys
fbd7c000 36b8f993 - mup.sys             f7180000 36d49216 - nwlnkspx.sys
fbd41000 373367e9 - srv.sys             fbeba000 371cee11 - power.sys
f7050000 33a84ee3 - Cdfs.SYS            fbc06000 37338e35 - Fastfat.SYS
f75cf000 36bb6f3c - CRASDRV.SYS

Address  dword dump   Build [1381]                            - Name
f7433e90 f75cf2a4 f75cf2a4 8016e565 8087eb90 806f4000 fbeb1ea0 - CRASDRV.SYS
f7433e94 8016e565 8016e565 8087eb90 806f4000 fbeb1ea0 fbeb1ea0 - ntoskrnl.exe
f7433ed4 8011aa6b 8011aa6b 00000008 00000246 8016ec04 001e001e - ntoskrnl.exe
f7433ee0 8016ec04 8016ec04 001e001e 806f74e8 0010000e e17f8128 - ntoskrnl.exe
f7433f04 f75cf000 f75cf000 80751508 00000076 806f4000 806f7e08 - CRASDRV.SYS
f7433f20 8016e715 8016e715 00000290 fbeb1ea0 00000001 00000001 - ntoskrnl.exe
f7433f38 8010b0a1 8010b0a1 fbeb1ea0 f7433f7c 00000000 00000000 - ntoskrnl.exe
f7433f50 80137044 80137044 00000001 00000000 00000000 00000000 - ntoskrnl.exe
f7433f70 8013ab64 8013ab64 80145500 00000000 00000000 80142346 - ntoskrnl.exe
```

[illegible] 1 [illegible] ([illegible] Windows NT^{R} Workstation 4.0)

[illegible] STOP [illegible] 4 [illegible]

[illegible] STOP [illegible] 2 [illegible]

STOP [illegible] ([illegible])

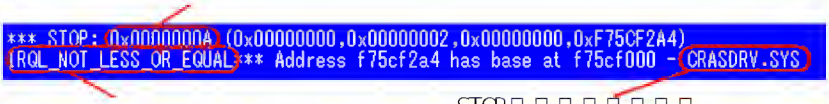

```
*** STOP: 0x0000000A (0x00000000,0x00000002,0x00000000,0xF75CF2A4)
IRQL_NOT_LESS_OR_EQUAL*** Address f75cf2a4 has base at f75cf000 - CRASDRV.SYS
```

[illegible]

STOP [illegible]

[illegible], [illegible] "CRASDRV.SYS" [illegible] 0xF75CF000 [illegible]

[illegible] 0xF75CF2A4 [illegible] STOP [illegible] ([illegible] 0x0000000a [illegible] IRQL_NOT_LESS_OR_EQUAL) [illegible]

Web [illegible]

2.4Web [illegible]

[illegible] Windows [illegible]

1."STOP" [illegible] ([illegible] "0x0000000a") [illegible] STOP [illegible]

[illegible] 8 [illegible] "0x0a" [illegible] "0a" [illegible] "0x0A" [illegible]

2 [illegible]

[illegible] ("IRQL_NOT_LESS_OR_EQUAL" [illegible]) [illegible]

3 [illegible]

[illegible] " [illegible] " [illegible] 1 [illegible]

4 [illegible] " [illegible] " [illegible]

[illegible] "KBHOWTO" [illegible] "KBINFO" [illegible]

5 [illegible]

" [illegible] " [illegible] (http://www.microsoft.com/japan/support/faq/) (2001 [illegible] 9 [illegible]) [illegible]

2.5 [illegible] BIOS [illegible]

[illegible] BIOS [illegible] FLORA [illegible]

http://www.hitachi.co.jp/Prod/comp/OSD/pc/flora/download/type/index.html

[illegible] PC [illegible]

[illegible] "[illegible]" [illegible] OS [illegible] OS [illegible] BIOS [illegible]

[illegible]

FLORA 270HX/GX

[illegible] BIOS

[illegible]	[illegible]	[illegible] OS	[illegible]			
			HX	GX		
			NW5	NW1	NW2	NW3
01/08/29	FLORA 270GX/20NW(NW6) [illegible] ROM BIOS [illegible] (Ver. R01-A5d)	[illegible] NT [illegible] Me [illegible] 9x	–	[illegible]	[illegible]	[illegible]

2.6 [illegible]

Windows XP[illegible]"[illegible]"[illegible]"[illegible]"[illegible]"[illegible]"[illegible]

[illegible]

[illegible]"[illegible]"[illegible]"[illegible]"[illegible]

[illegible]

[illegible]Administrator[illegible]
[illegible][[illegible]]—[[illegible]][illegible]
[illegible]"[illegible]"[illegible]"[illegible]"[illegible]
[illegible]"[illegible](R)"[illegible]"[illegible]"[illegible]
[illegible]
[illegible]"[illegible]"[illegible]
[illegible]"[illegible]"[illegible]
[illegible]"[illegible]"[illegible]"[illegible]

[illegible]

[illegible]Administrator[illegible]
[illegible][[illegible]]—[[illegible]][illegible]
[illegible]"[illegible]"[illegible]"[illegible]"[illegible]
[illegible]"[illegible](E)"[illegible]"[illegible]"[illegible]
[illegible]"[illegible]"[illegible]"[illegible]"[illegible]
[illegible]"[illegible]"[illegible]

[illegible]

[illegible]Administrator[illegible]

[illegible][[illegible]]—[[illegible]][illegible]

[illegible]"[illegible]"[illegible]"[illegible]"[illegible]

[illegible]"[illegible](U)"[illegible]"[illegible]"[illegible]

[illegible]"[illegible]"[illegible]

[illegible]"[illegible]"[illegible]

[illegible]"[illegible]"[illegible]

[illegible]

[illegible]Administrator[illegible]

[illegible][[illegible]]—[[illegible]][illegible]

[illegible]"[illegible]"[illegible]

[illegible]

[illegible]

[illegible]"[illegible]"[illegible]

[illegible]"[illegible]"[illegible]

[illegible]

[illegible]"[illegible]"[illegible]

[illegible]"[illegible]"[illegible]

[illegible]

重要

◎ [illegible]

[illegible]Microsoft Windows XP[illegible](2001[illegible]9[illegible])

http://www.microsoft.com/japan/developer/windows/techart/windowsxpsystemrestore.asp

[illegible]

[illegible]

[illegible](*)[illegible]

[illegible](*)

[illegible](*)

[illegible]
[illegible]/[illegible]
[illegible]/[illegible]
[illegible]
[illegible]
[illegible](*)
[illegible](*)
[illegible](*) [illegible] [illegible]
[illegible]
[illegible]

[illegible]
[illegible] OS[illegible](*)
[illegible](*)
[illegible](*)
[illegible](*)

[illegible]
[illegible](*)

[illegible](*)

[illegible](*)

[illegible](*)

[illegible](*)

[illegible](*)

[illegible]

[illegible]

[illegible] EVT [illegible] TXT [illegible]

[illegible]

[illegible]

Windows 2000/Windows XP [illegible]

[illegible]

参照

[illegible] [2.2 [illegible]] → P.12

[illegible] " [illegible] " [illegible]

[illegible] " [illegible] " [illegible]

[illegible] EVT [illegible] [[illegible]] [illegible]

[illegible] TXT [illegible]

[illegible]

Windows NT [illegible]

[illegible]

参照

[illegible] [2.2 [illegible]] → P.12

[illegible] [[illegible]] [illegible] [[illegible]] [illegible]

[illegible] [[illegible]] [illegible]

[illegible] EVT [illegible] [[illegible]] [illegible]

[illegible] TXT [illegible]

[illegible]

[illegible] /Windows NT [illegible]

[illegible]

Windows XP [illegible]

[illegible] [[illegible]]-[[illegible]]-[[illegible]]-[[illegible]]-[[illegible]] [illegible]

[illegible] " [illegible] " [illegible]

[illegible] " [illegible] " [illegible]

[illegible] [[illegible]] [illegible]

Windows 2000 [illegible]

[illegible] [[illegible]]-[[illegible]]-[[illegible]]-[[illegible]]-[[illegible]] [illegible]

[illegible] " [illegible] " [illegible]

[illegible] " [illegible] " [illegible]

[illegible][[illegible]] [illegible]

[illegible]

重要

◎ [illegible]

Windows NT [illegible] :

[illegible] [[illegible]]—[[illegible]]-[[illegible]]-[Windows NT [illegible]] [illegible]

[illegible] [[illegible]] [illegible] [[illegible]] [illegible]

[illegible] [OK] [illegible]

[illegible] Windows NT [illegible] [[illegible]] [illegible]

[illegible]

[illegible]

[illegible]

[illegible] system32 [illegible] / [illegible]

[[illegible]] [illegible] dir /s [illegible] SystemRoot [illegible] ¥system32 [illegible]

[illegible]

[illegible]

STOP [illegible]

■STOP [illegible]

Windows NT [illegible]

[illegible]¥[illegible] [[illegible] / [illegible]] [illegible] [[illegible]] [illegible]
[illegible] ON [illegible]
[illegible]]
[[illegible]]
[illegible]]

Windows 2000/Windows XP [illegible]

[illegible]¥[illegible] [[illegible]] [illegible] [[illegible] / [illegible]] [illegible] [[illegible]] [illegible]
[illegible] ON [illegible]
[illegible]]
[[illegible]]
[illegible]

[illegible] [[illegible]] [illegible]

[illegible]

STOP[illegible]

[illegible]
[illegible] [illegible] [[illegible]] [illegible] [illegible] ([illegible] [illegible][[illegible]] [illegible] [[illegible]] [illegible]) [illegible]DRWTSN32[illegible] OK[illegible][Windows NT [illegible]] [illegible] [illegible]

[illegible][[illegible]][illegible][[illegible]][illegible]

[illegible]Windows NT[illegible]

[illegible]

[illegible]
[illegible] [illegible] [[illegible]] [illegible] [illegible] ([illegible] [illegible][[illegible]] [illegible] [[illegible]] [illegible]) [illegible]DRWTSN32[illegible] OK [illegible][Windows NT [illegible]] [illegible] [illegible]

[illegible][[illegible]] [illegible] WindowsNT [illegible]

[illegible] (Windows 2000/Windows XP[illegible])

PnP [illegible] Windows [illegible] API [illegible]
[illegible]"[illegible]SystemRoot[illegible]¥SETUPAPI.LOG"[illegible] "[illegible]SystemRoot[illegible]" [illegible] Windows200 [illegible]"C:¥WINNT"[illegible] Windows XP[illegible]:"C:¥Windows"[illegible]

[illegible]

[illegible]

[illegible]

[illegible]Windows[illegible]Windows NT[illegible]Microsoft Corp.[illegible]

[illegible]

[illegible]

[illegible] 2001[illegible]10[illegible]

[illegible]

[illegible]

[illegible]

[illegible]

[illegible] 259-1304 [illegible] 1[illegible]

Copyright © Hitachi,Ltd. 2001. All rights reserved.

[illegible]